PHY101: Introduction to Physics-1

Monsoon, 2017

Tutorial-6

1. Find the work done in moving an object along a straight line from (3, 2, -1) to (2, -1, 4) in a force field given by **F** = 4**i** - 3**j** + 2**k**.

2. A cannon fires successively two shells with velocity v_o = 250 m/s; the first at the angle θ_1 = 60° and the second at the angle θ_2 = 45° to the horizontal, the azimuth being the same. Neglecting the air drag, find the time interval between firings leading to the collision of the shells.

3. A pendulum is hanging from the ceiling of a car having an acceleration a_0 with respect to the road. Find the angle θ made by the string with the vertical.

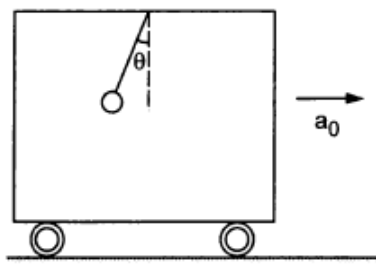
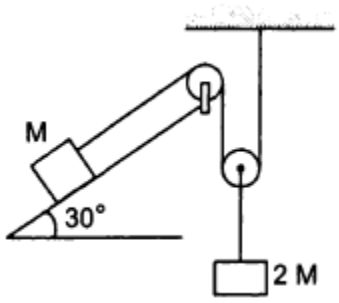
4. Find the acceleration of the block of mass M in the situation shown in figure below. All the surfaces are frictionless and the pulleys and the string are light.